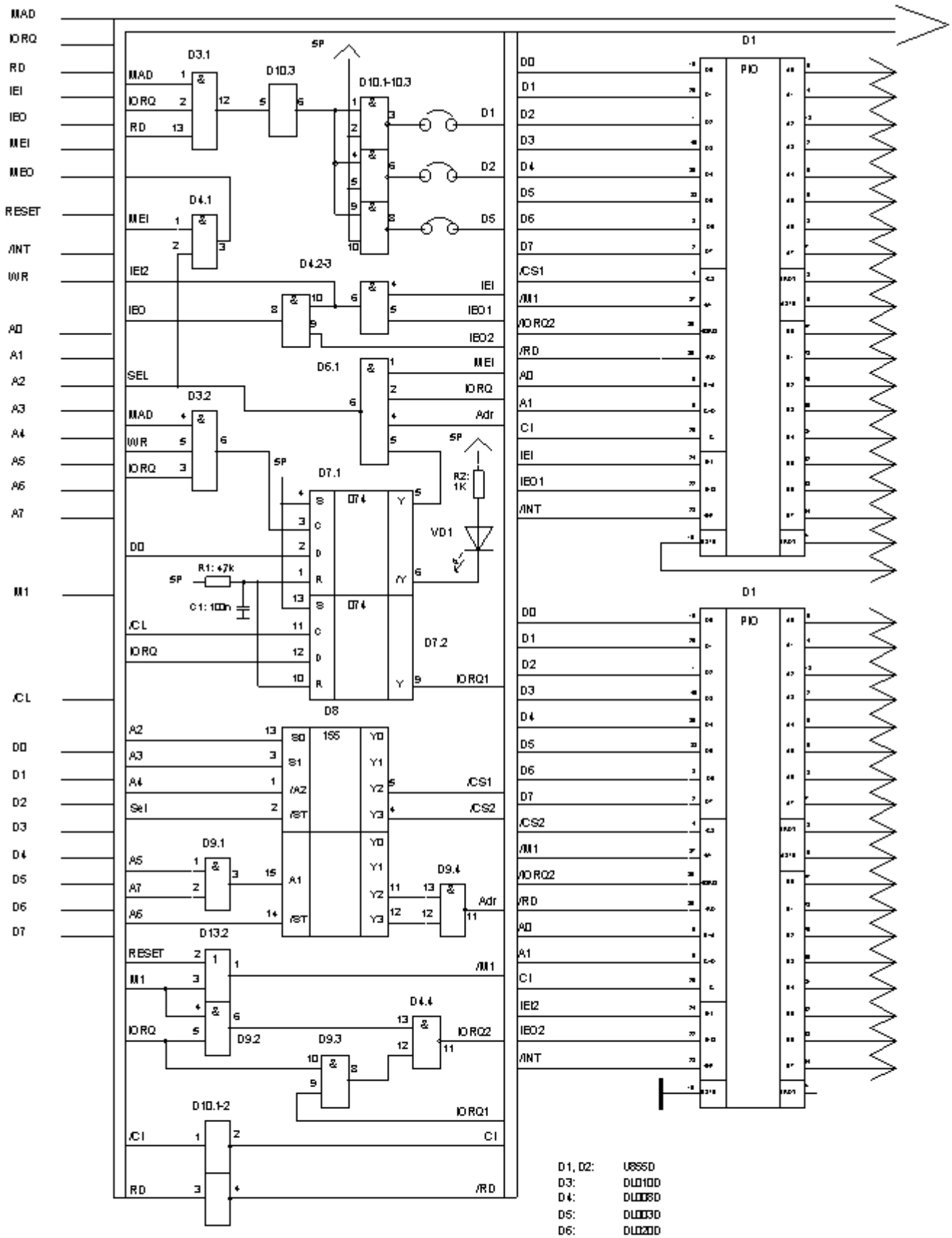

D1, D2:	U855D
D3:	DL010D
D4:	DL008D
D5:	DL003D
D6:	DL020D
D7:	DL074D
D8:	DL155D
D9:	DL000D
D10:	DL004D
D11:	DL002D

BG PIO-PORT (Stromlaufplan T1)
KC85/3-Zusatzgerät SEW

(4x 8-Bit-Parallel Port)

Copyright © Peter Salomon, Heinrich-Gläser-Str.159, 12621 Berlin (1983/2004)